# GENERAL BUNDLE B FLARED EDGE COATED POSITIONERS

PRODUCT INFORMATION

PHILLIPS-SAFETY.COM

COPYRIGHT ©2026. ALL RIGHTS RESERVED

PHILLIPS SAFETY
PRODUCTS INC.

**PRODUCT INFORMATION**

GENERAL BUNDLE B FLARED EDGE COATED POSITIONERS

PPFP-KIT6

The General Bundle B Flared Edge Coated Positioners is a kit that brings together a selection of foam positioners for patient support and positioning during medical imaging procedures. Designed for general imaging environments, it includes blocks, wedges, wedge sets, and a rectangle positioner for a range of positioning needs.

The General Bundle B includes **one of each** of the following:

- PPFP-PCAA – Adult Finger Oblique Flared Edge Coated Block
- PPFP-PCAK – Circular Head Flared Edge Coated Block
- PPFP-PCBC – Small 45 Degree Spinal Flared Edge Coated Wedge
- PPFP-PCBE – 34 Degree Flared Edge Coated Wedge Set
- PPFP-PCBI – 15 Degree Flared Edge Coated Wedge Set
- PPFP-PCBJ – 12 Degree Flared Edge Coated Wedge Set
- PPFP-PCBL – Small 3″ Flared Edge Coated Rectangle Positioner

For added durability, a medical-grade, fluid-resistant coating covers each foam positioner. The coating is easy to clean with medical-grade disinfectant wipes or sprays. It also helps protect the foam interior during repeated clinical use. In addition, the positioners are radiolucent, with low attenuation and minimal shadowing during imaging.

The patented N-VISI-RAY design features flared edges that help significantly reduce artifacts during X-ray imaging. Although the flared sides increase the overall size of the positioners, they do not affect imaging or positioning.

Finally, the positioners included in General Bundle B are MRI Safe and latex-free. This makes the kit suitable for use across a variety of medical imaging environments.

## SPECIFICATIONS

**SHIPPING WEIGHT: 80 oz**

**SHIPPING DIMENSIONS: 26 × 14 × 11 in**

**MATERIAL: Coated Foam**

**POSITIONER TYPE: X-Ray Positioning Sets**

**FEATURES: Flared Edge, MRI Safe, Latex-Free, Radiolucent, Low Attenuation, Easy to Clean**

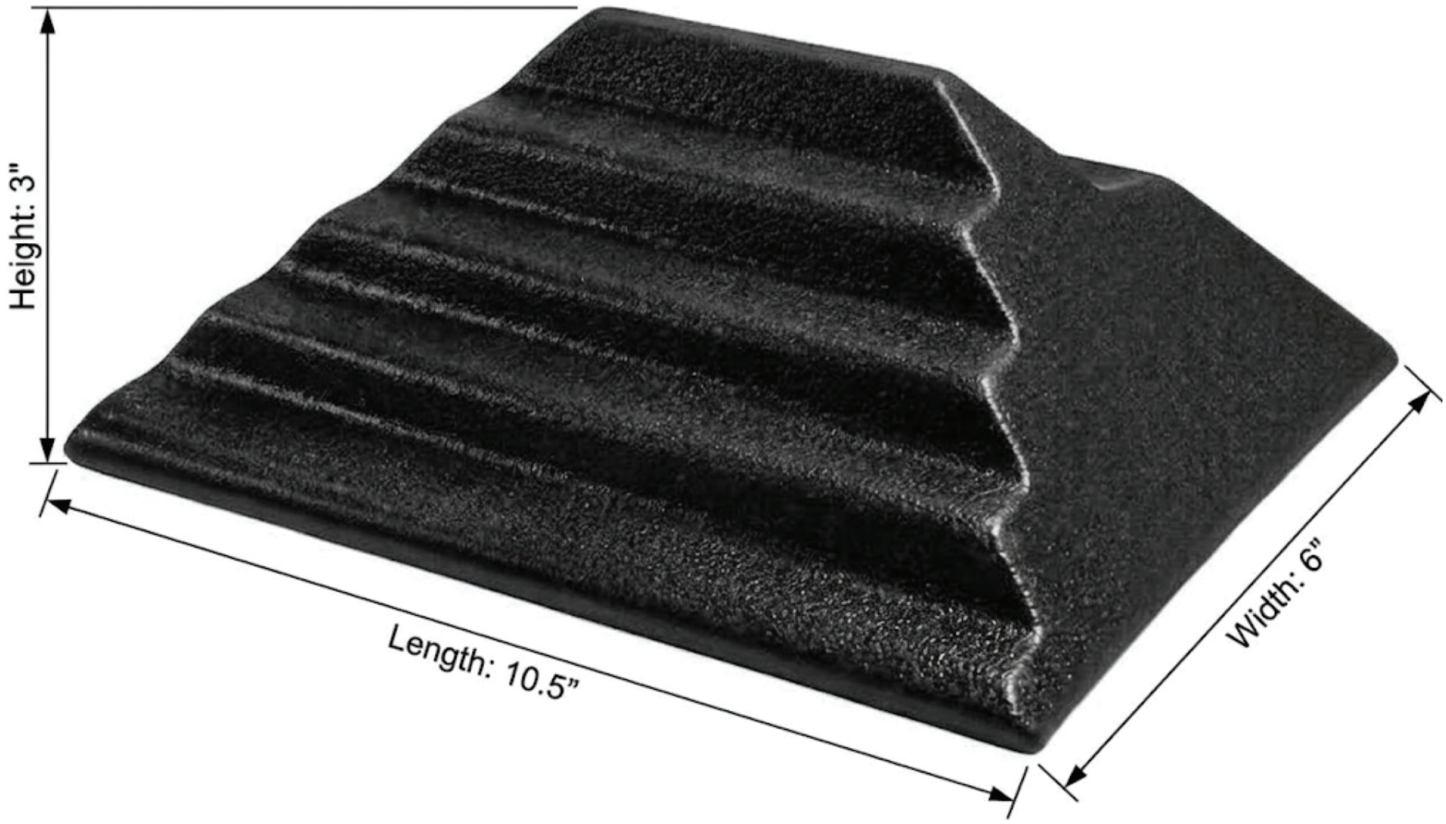


| | | |
|---|---|---|
| **Date:** 9/21/2026 | | **Drawing Title:** Adult Finger Oblique Flared Edge Coated Block |
| **Scale:** 1:1 | **Unit:** Inches | **Drawing No:** PPFP-PCAA |
| | | **Notes:** All dimensions are $\pm 0.1"$ |

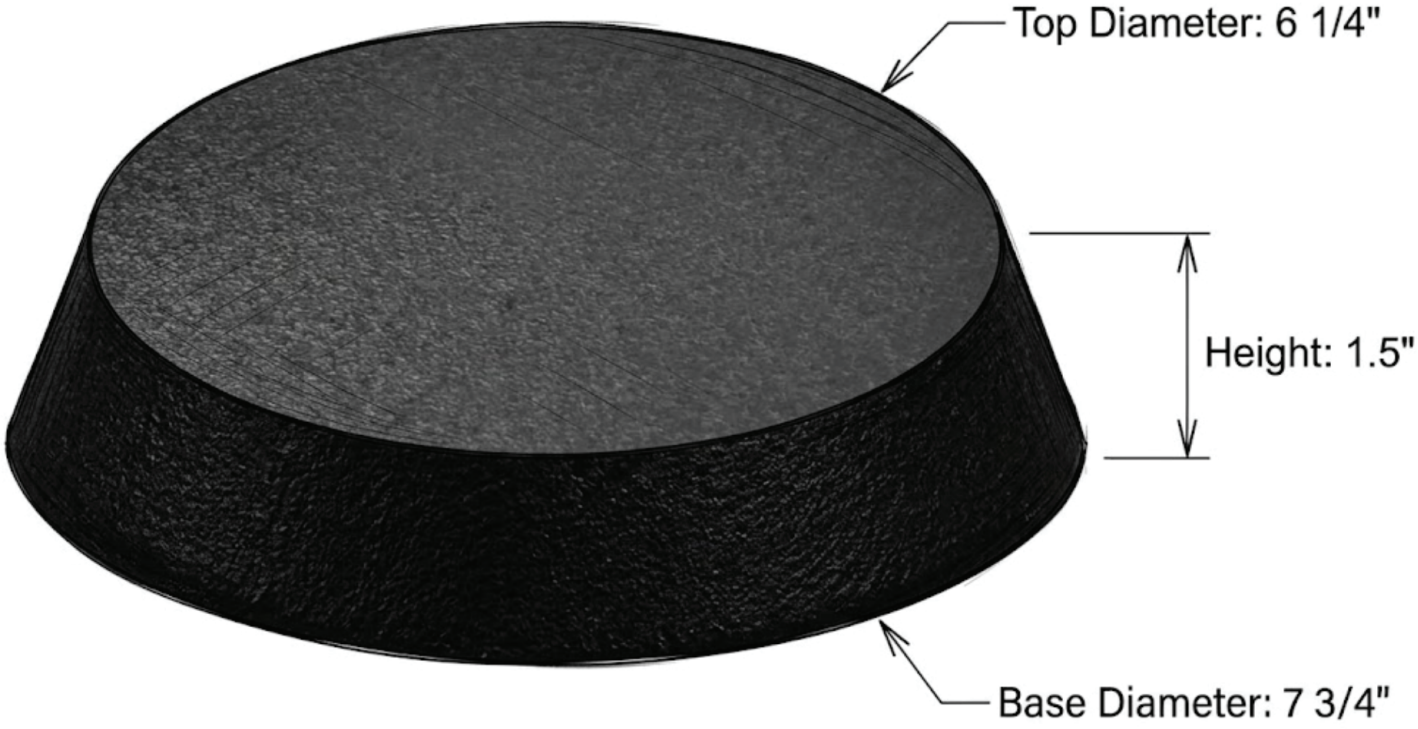


| | | |
|---|---|---|
| **Date:** 9/21/2026 | | **Drawing Title:** Circular Head Flared Edge Coated Block |
| **Scale:** 1:1 | **Unit:** Inches | **Drawing No:** PPFP-PCAK |
| | | **Notes:** All dimensions are ±0.1" |

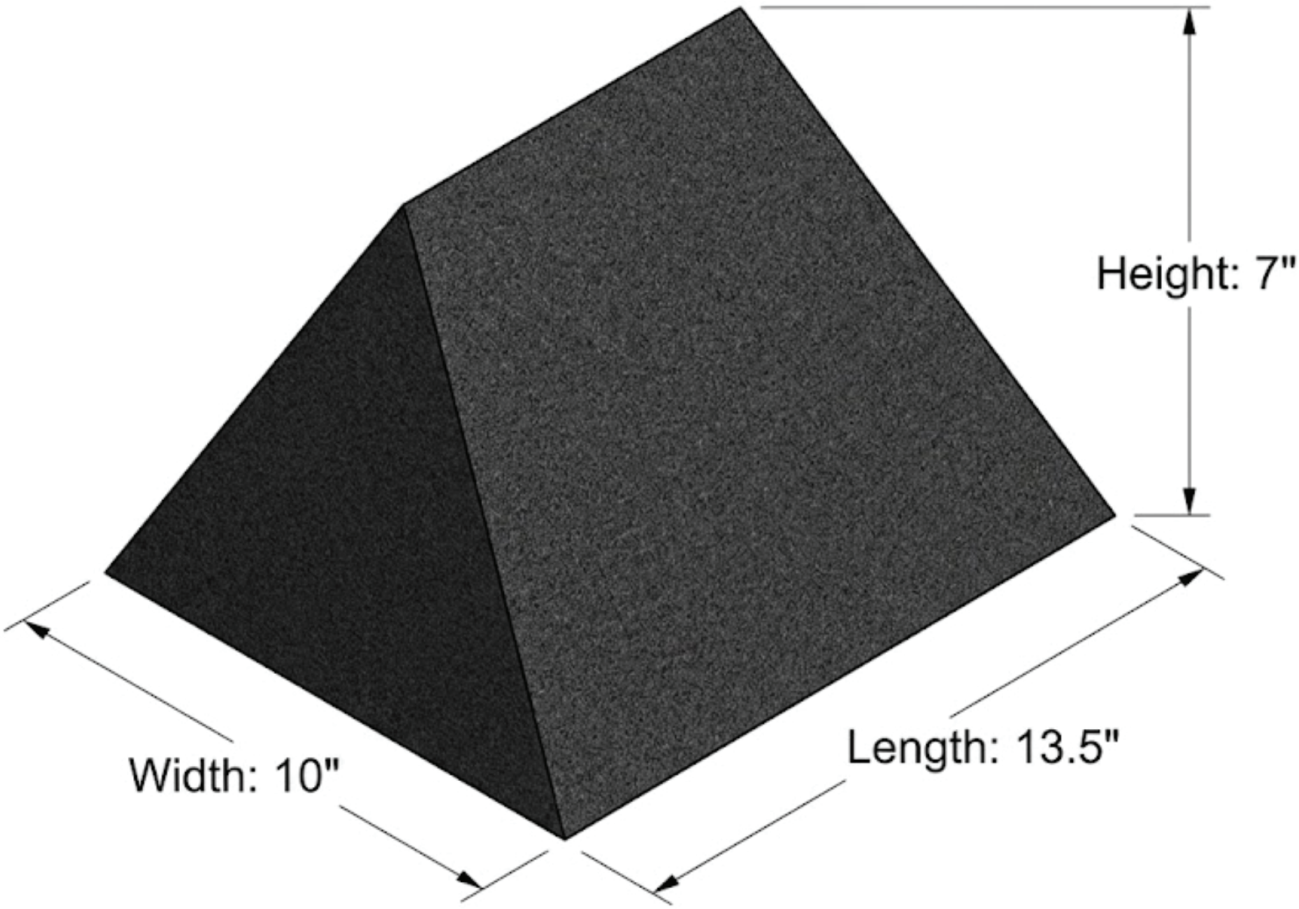


| | | |
|---|---|---|
| **Date:** 9/21/2026 | | **Drawing Title:** 45 Degree Spinal Flared Edge Coated Wedge |
| **Scale:** 1:1 | **Unit:** Inches | **Drawing No:** PPFP-PCBC |
| | | **Notes:** All dimensions are $\pm 0.1$" |

**PRODUCT INFORMATION**

34 DEGREE FLARED EDGE COATED WEDGE SET

PPFP-PCBE

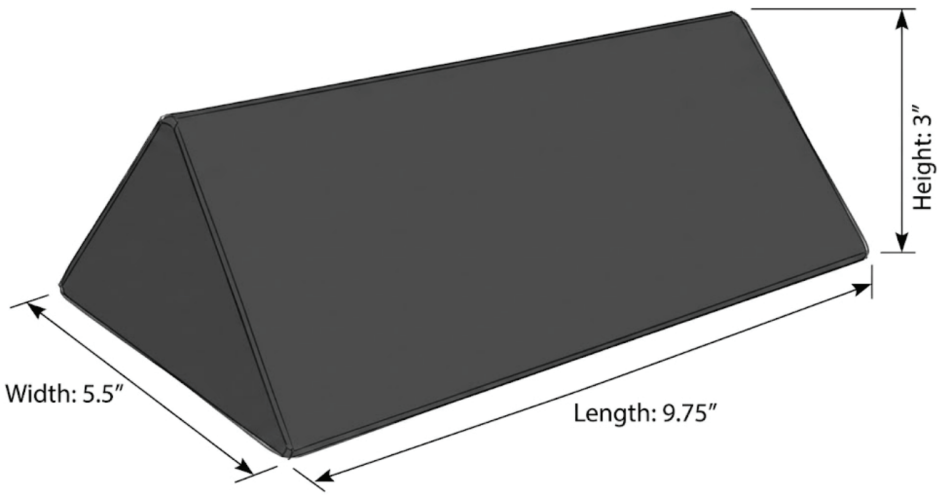


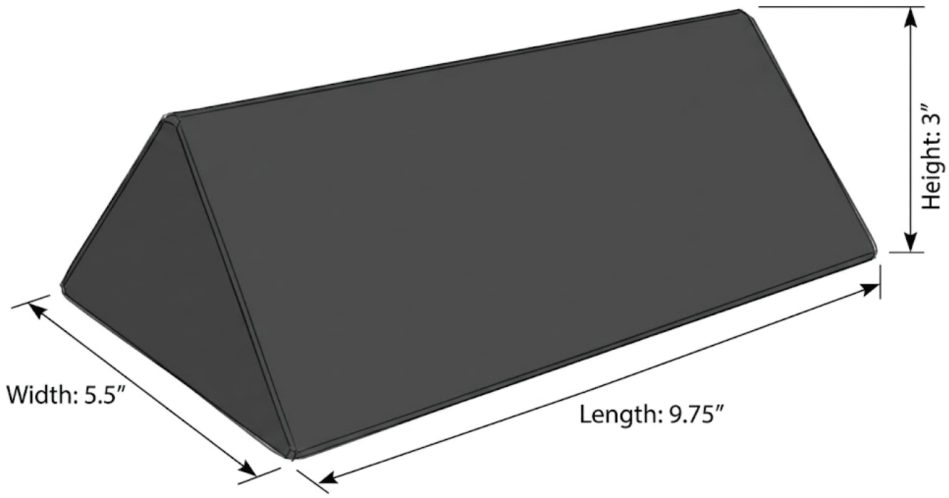


| | | |
|---|---|---|
| **Date:** 9/21/2026 | | **Drawing Title:** Flared Edge Coated Wedge Set |
| **Scale:** 1:1 | **Unit:** Inches | **Drawing No:** PPFP-PCBE |
| | | **Notes:** All dimensions are ±0.1" |

**PRODUCT INFORMATION**

15 DEGREE FLARED EDGE COATED WEDGE SET

PPFP-PCBI

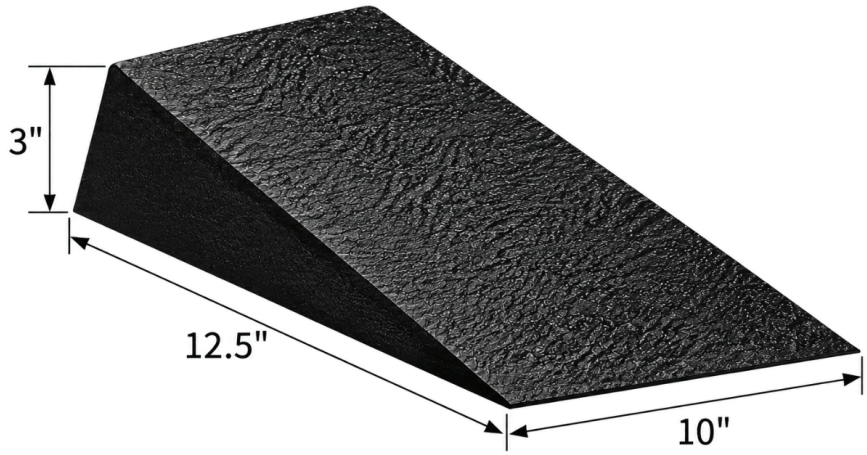


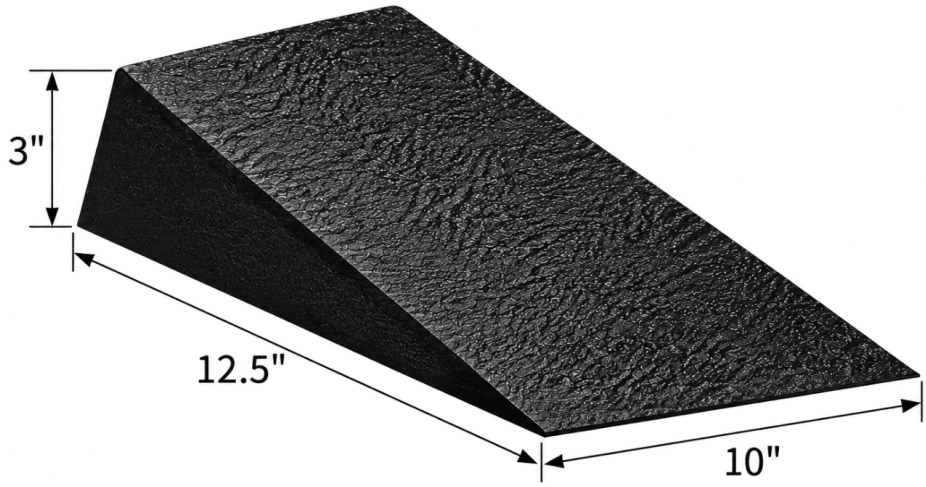


| | | |
|---|---|---|
| **Date:** 9/21/2026 | | **Drawing Title:** Flared Edge Coated Wedge Set |
| **Scale:** 1:1 | **Unit:** Inches | **Drawing No:** PPFP-PCBI |
| | | **Notes:** All dimensions are ±0.1" |

**PRODUCT INFORMATION**

12 DEGREE FLARED EDGE COATED WEDGE SET

PPFP-PCBJ

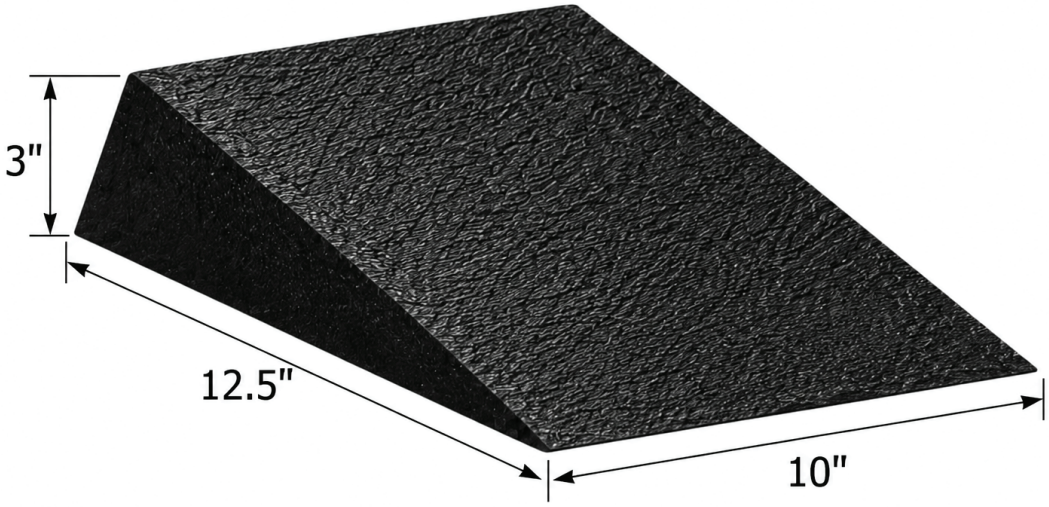


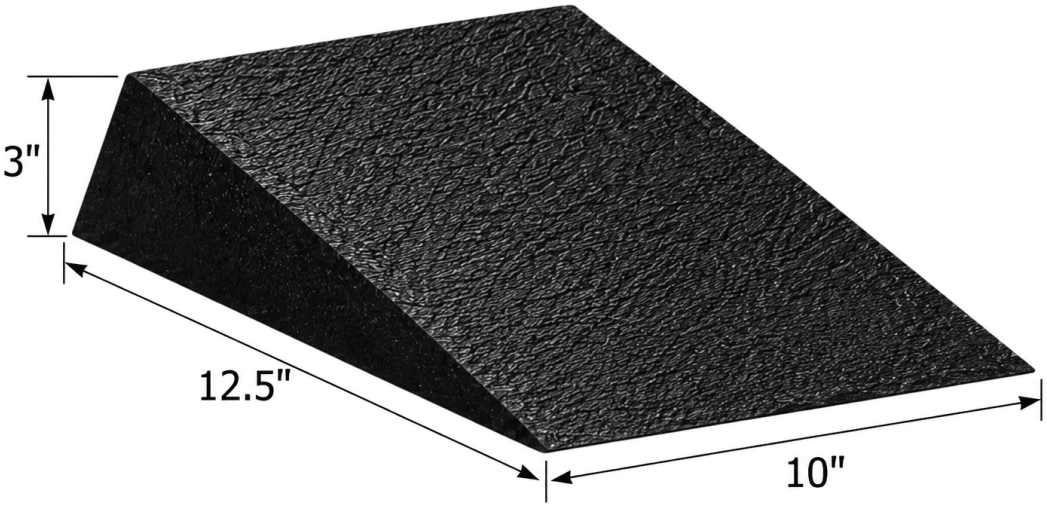


| | | |
|---|---|---|
| **Date:** 9/21/2026 | | **Drawing Title:** Flared Edge Coated Wedge Set |
| **Scale:** 1:1 | **Unit:** Inches | **Drawing No:** PPFP-PCBJ |
| | | **Notes:** All dimensions are ±0.1" |

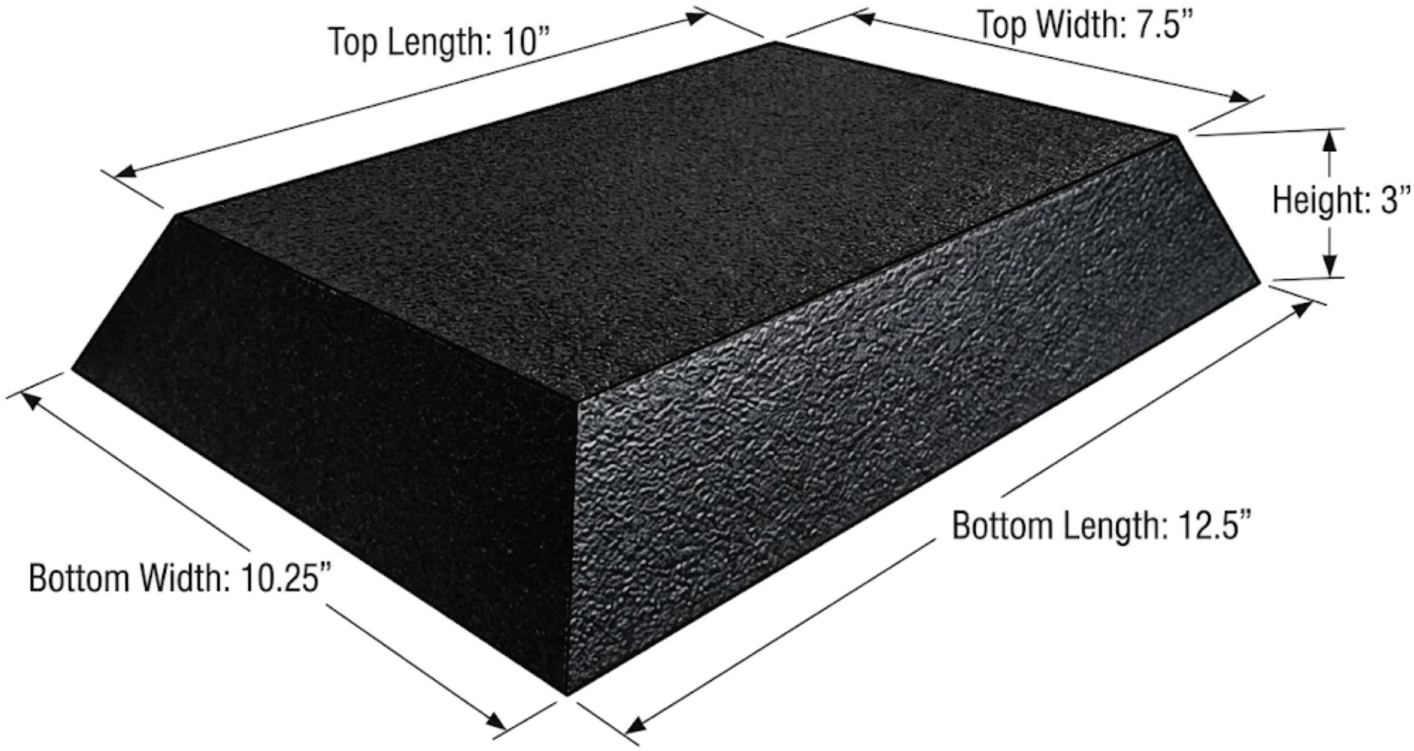


| | | |
|---|---|---|
| **Date:** 9/21/2026 | | **Drawing Title:** 3" Flared Edge Coated Rectangle Positioner |
| **Scale:** 1:1 | **Unit:** Inches | **Drawing No:** PPFP-PCBL |
| | | **Notes:** All dimensions are ±0.1" |

# CONTACT

Should you need any further information,
please do not hesitate to contact us.

123 Lincoln Blvd, Middlesex, NJ 08846, USA

+1 866 575 1307

service@phillips-safety.com

www.phillips-safety.com