URGENT CARE BUNDLE FLARED EDGE COATED POSITIONERS

PRODUCT INFORMATION

PHILLIPS-SAFETY.COM

COPYRIGHT ©2026. ALL RIGHTS RESERVED

PHILLIPS SAFETY
PRODUCTS INC.

PRODUCT INFORMATION

URGENT CARE BUNDLE FLARED EDGE COATED POSITIONERS

PPFP-KIT1



The Urgent Care Bundle Flared Edge Coated Positioners is a kit that brings together a selection of foam positioners for patient support and positioning during medical imaging procedures. Designed for urgent care environments, it includes blocks, wedges, and rectangle positioners for a range of positioning needs.

The Urgent Care Bundle includes **one of each** of the following:

- PPFP-PCAA – Adult Finger Oblique Flared Edge Coated Block
- PPFP-PCAD – Adult Lateral Finger Flared Edge Coated Block
- PPFP-PCAK – Circular Head Flared Edge Coated Block
- PPFP-PCBC – Small 45 Degree Spinal Flared Edge Coated Wedge
- PPFP-PCBD – Large 45 Degree Spinal Flared Edge Coated Wedge
- PPFP-PCBE – 34 Degree Flared Edge Coated Wedge Set
- PPFP-PCBJ – 12 Degree Flared Edge Coated Wedge Set
- PPFP-PCBL – Small 3″ Flared Edge Coated Rectangle Positioner
- PPFP-PCBN – Large 3″ Flared Edge Coated Rectangle Positioner

For added durability, a medical-grade, fluid-resistant coating covers each foam positioner. The coating is easy to clean with medical-grade disinfectant wipes or sprays. It also helps protect the foam interior during repeated clinical use. In addition, the positioners are radiolucent, with low attenuation and minimal shadowing during imaging.

The patented N-VISI-RAY design features flared edges that help significantly reduce artifacts during X-ray imaging. Although the flared sides increase the overall size of the positioners, they do not affect imaging or positioning.

Finally, the positioners included in the Urgent Care Bundle are MRI Safe and latex-free. This makes the kit suitable for use across a variety of medical imaging environments.

SPECIFICATIONS

SHIPPING WEIGHT: 128 oz

SHIPPING DIMENSIONS: 15 × 15 × 41 in

MATERIAL: Coated Foam

POSITIONER TYPE: X-Ray Positioning Sets

FEATURES: Flared Edge, MRI Safe, Latex-Free, Radiolucent, Low Attenuation, Easy to Clean

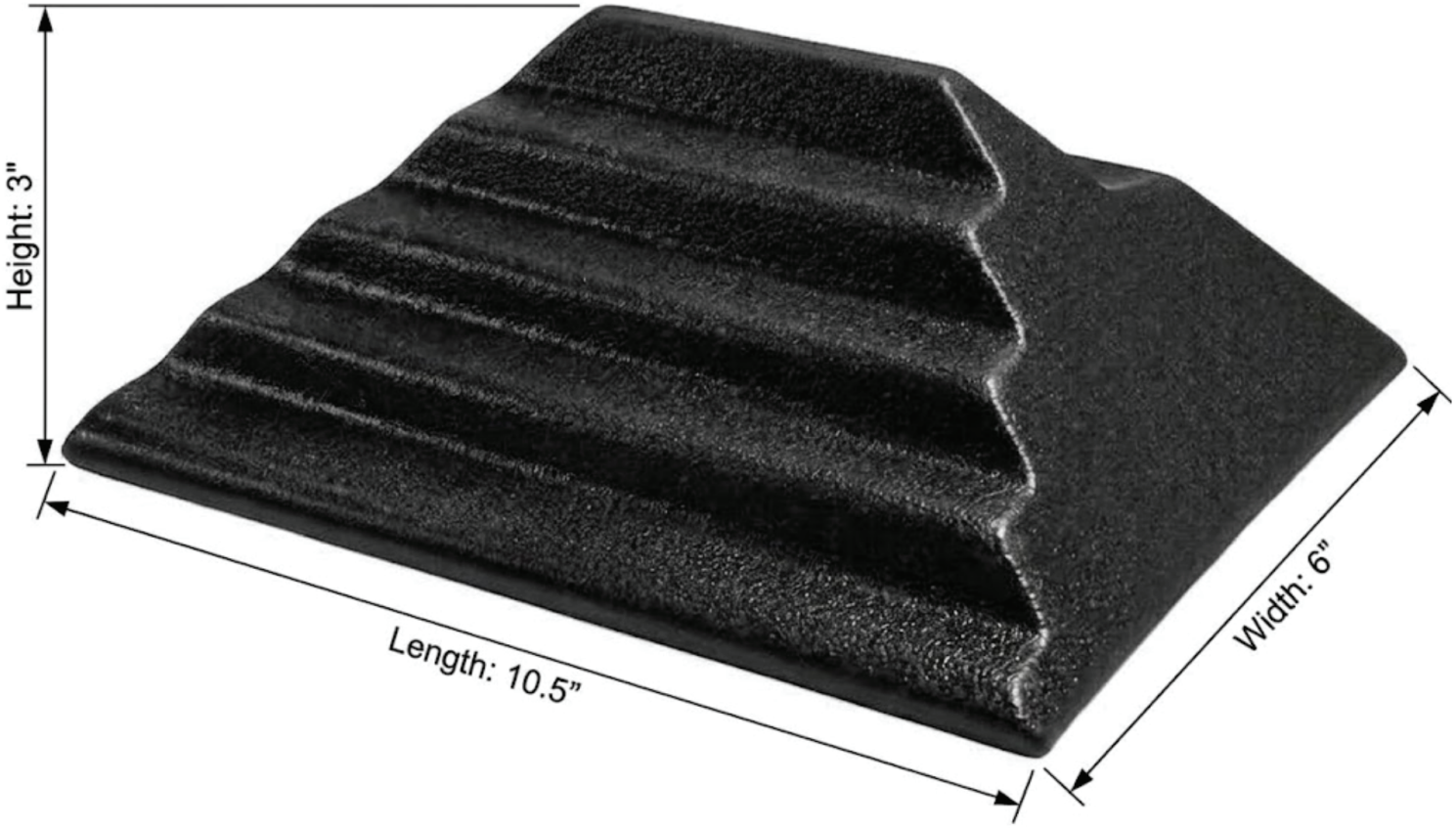

Date: 9/21/2026		**Drawing Title:** Adult Finger Oblique Flared Edge Coated Block
Scale: 1:1	**Unit:** Inches	**Drawing No:** PPFP-PCAA
		Notes: All dimensions are ±0.1"

PRODUCT INFORMATION
ADULT LATERAL FINGER FLARED EDGE COATED BLOCK
PPFP-PCAD

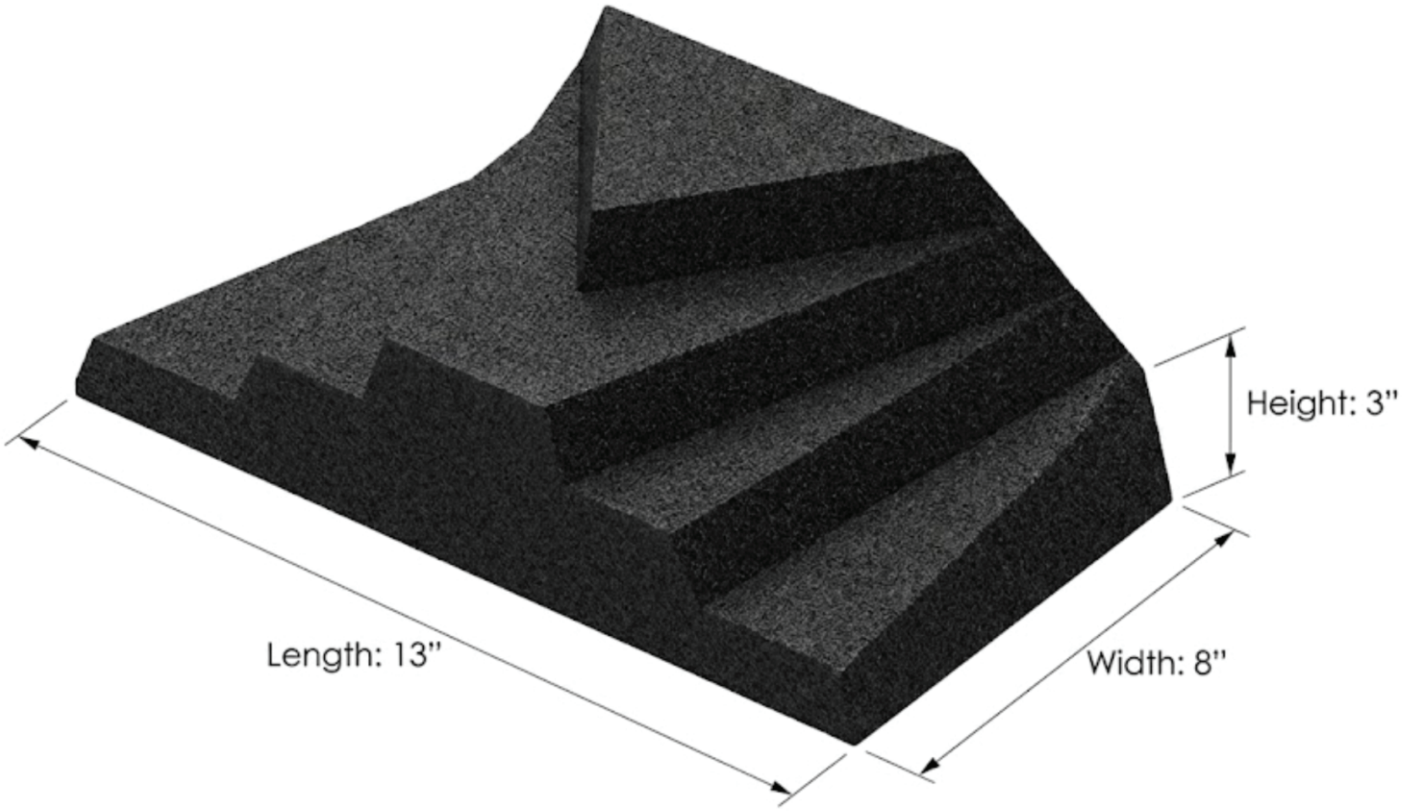

Date: 9/21/2026		**Drawing Title:** Adult Lateral Finger Flared Edge Coated Block
Scale: 1:1	**Unit:** Inches	**Drawing No:** PPFP-PCAD
		Notes: All dimensions are ±0.1"

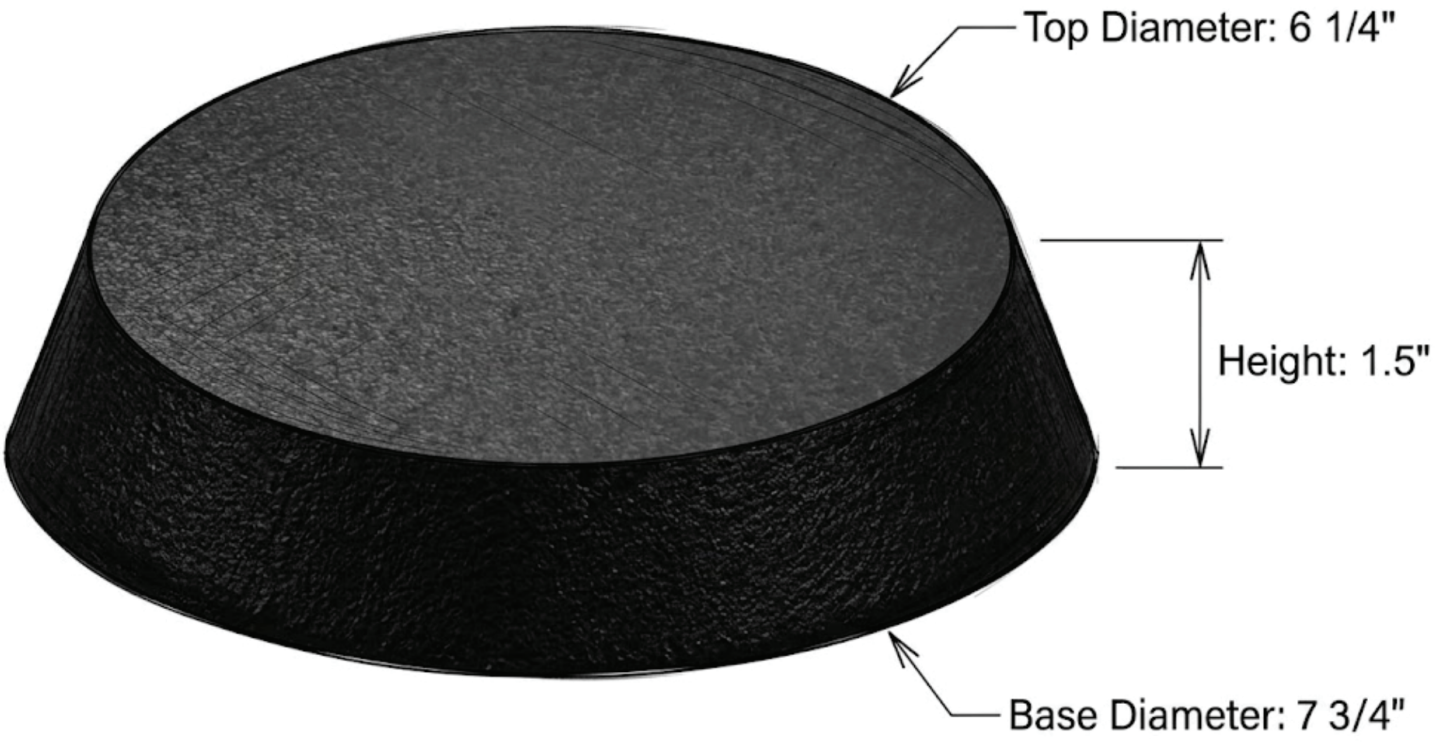

Date: 9/21/2026		**Drawing Title:** Circular Head Flared Edge Coated Block
Scale: 1:1	**Unit:** Inches	**Drawing No:** PPFP-PCAK
		Notes: All dimensions are ±0.1"

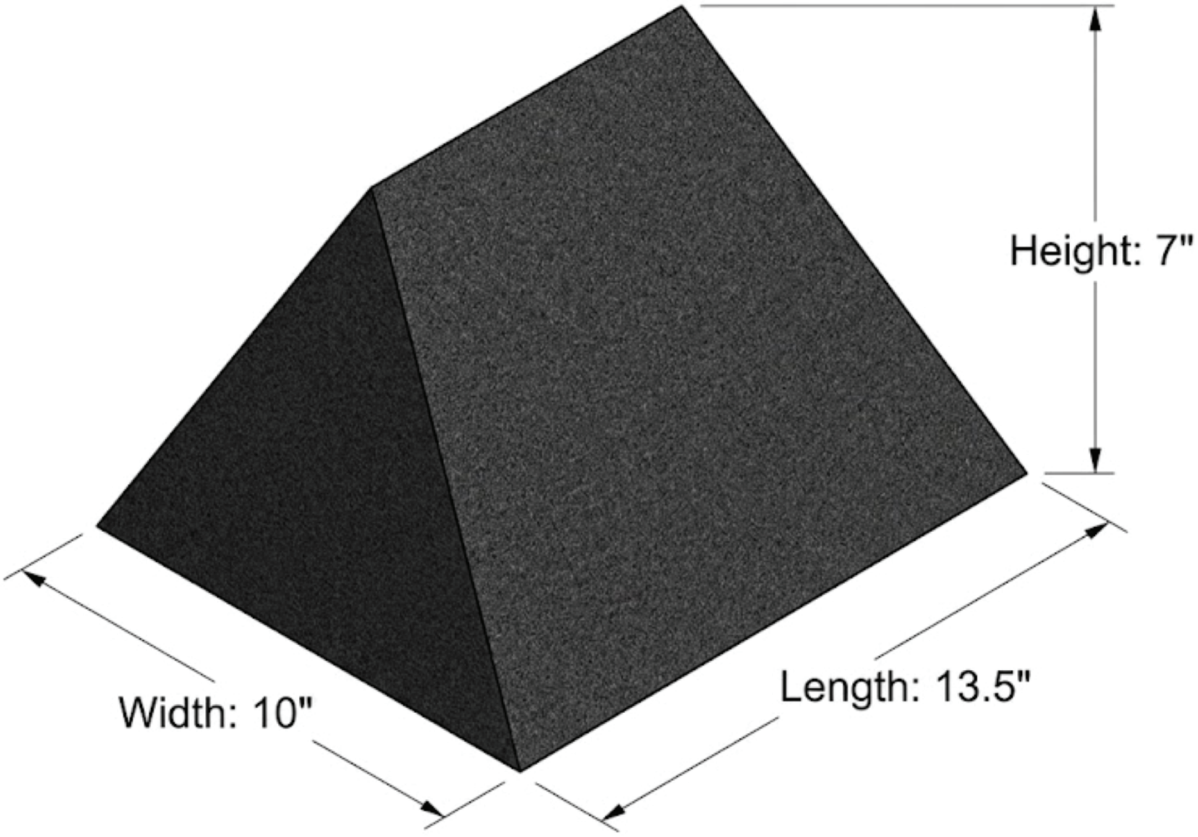

Date: 9/21/2026		**Drawing Title:** 45 Degree Spinal Flared Edge Coated Wedge
Scale: 1:1	**Unit:** Inches	**Drawing No:** PPFP-PCBC
		Notes: All dimensions are ± 0.1"

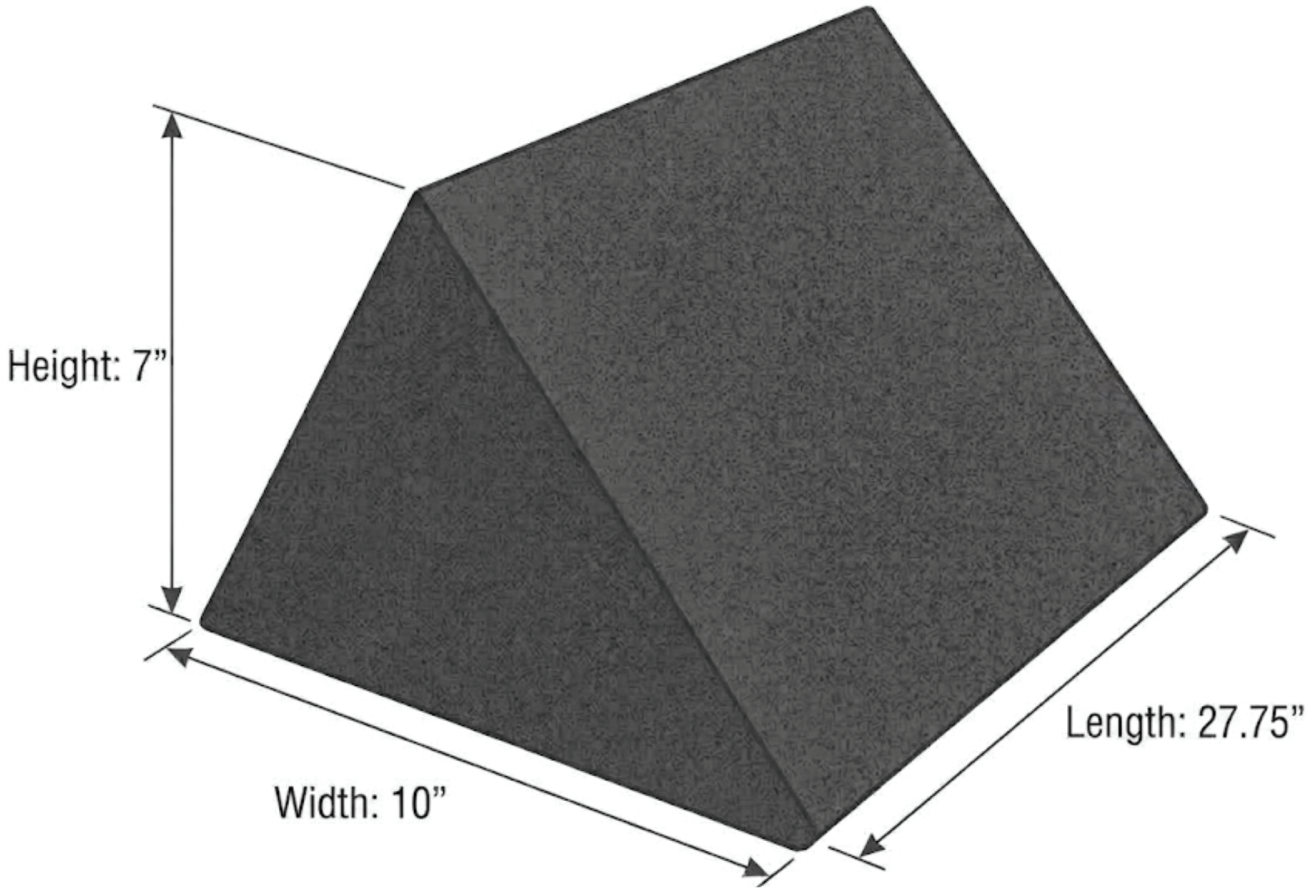

Date: 9/21/2026		**Drawing Title:** 45 Degree Spinal Flared Edge Coated Wedge
Scale: 1:1	**Unit:** Inches	**Drawing No:** PPFP-PCBD
		Notes: All dimensions are ±0.1"

PRODUCT INFORMATION
34 DEGREE FLARED EDGE COATED WEDGE SET
PPFP-PCBE

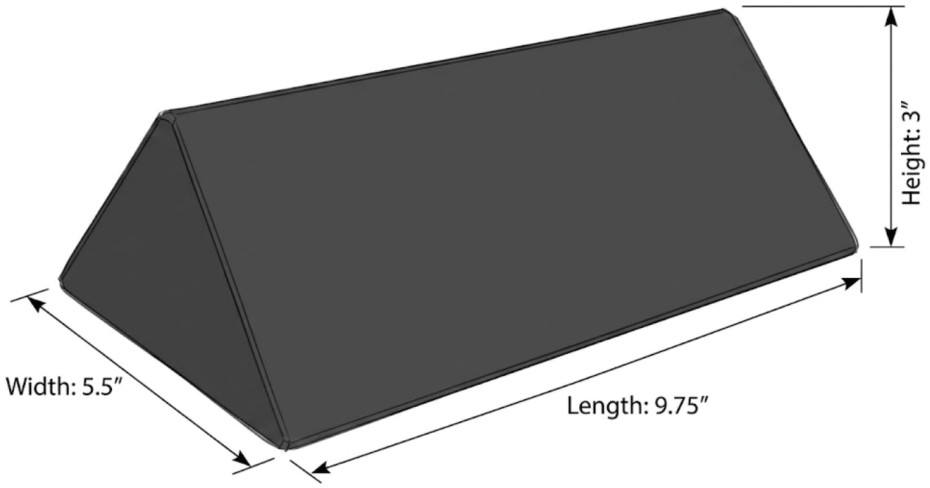

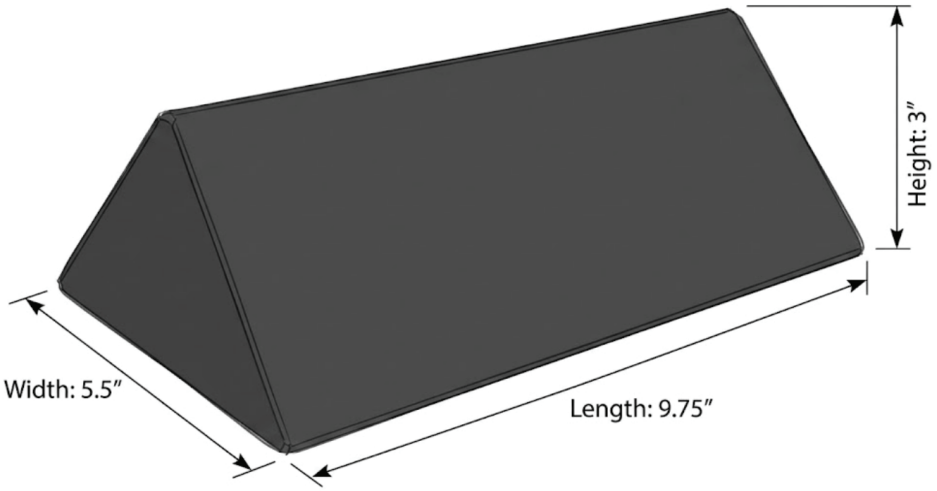

Date: 9/21/2026		**Drawing Title:** Flared Edge Coated Wedge Set
Scale: 1:1	**Unit:** Inches	**Drawing No:** PPFP-PCBE
		Notes: All dimensions are ±0.1"

PRODUCT INFORMATION
12 DEGREE FLARED EDGE COATED WEDGE SET
PPFP-PCBJ

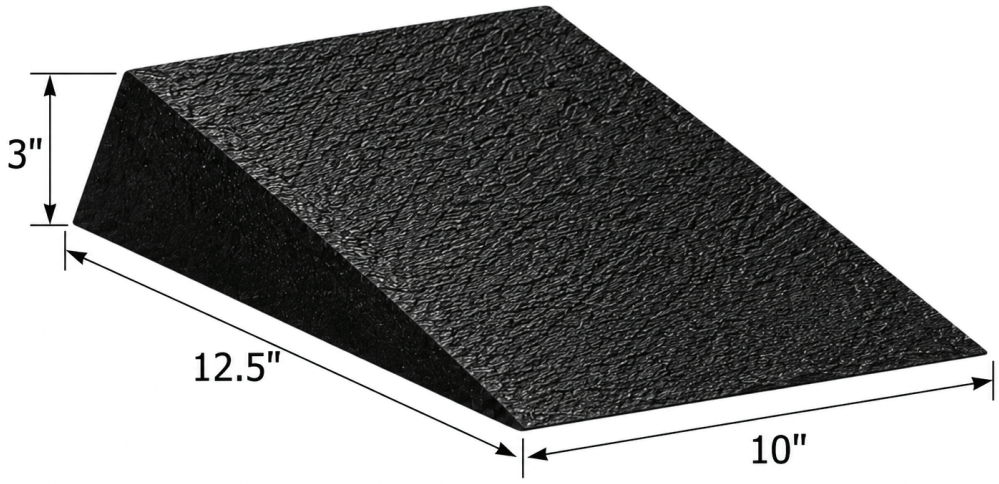

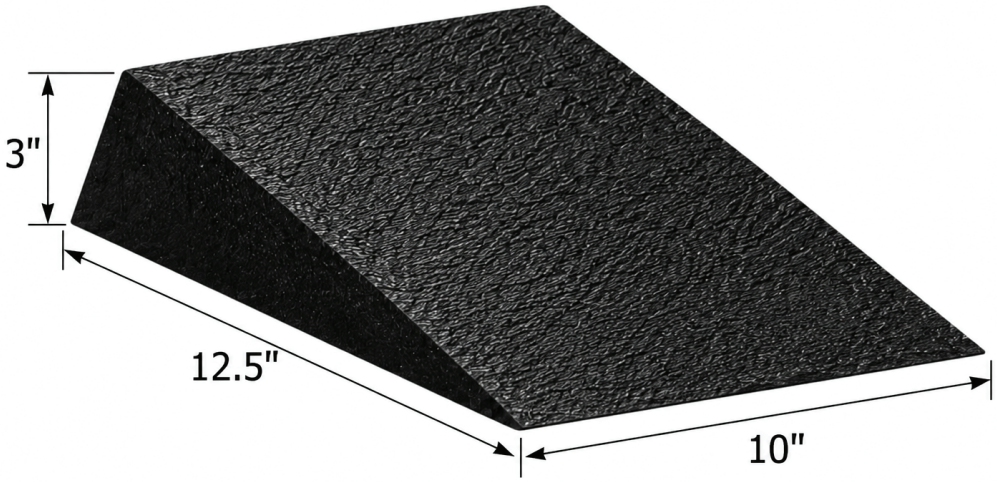

Date: 9/21/2026		**Drawing Title:** Flared Edge Coated Wedge Set
Scale: 1:1	**Unit:** Inches	**Drawing No:** PPFP-PCBJ
		Notes: All dimensions are ±0.1"

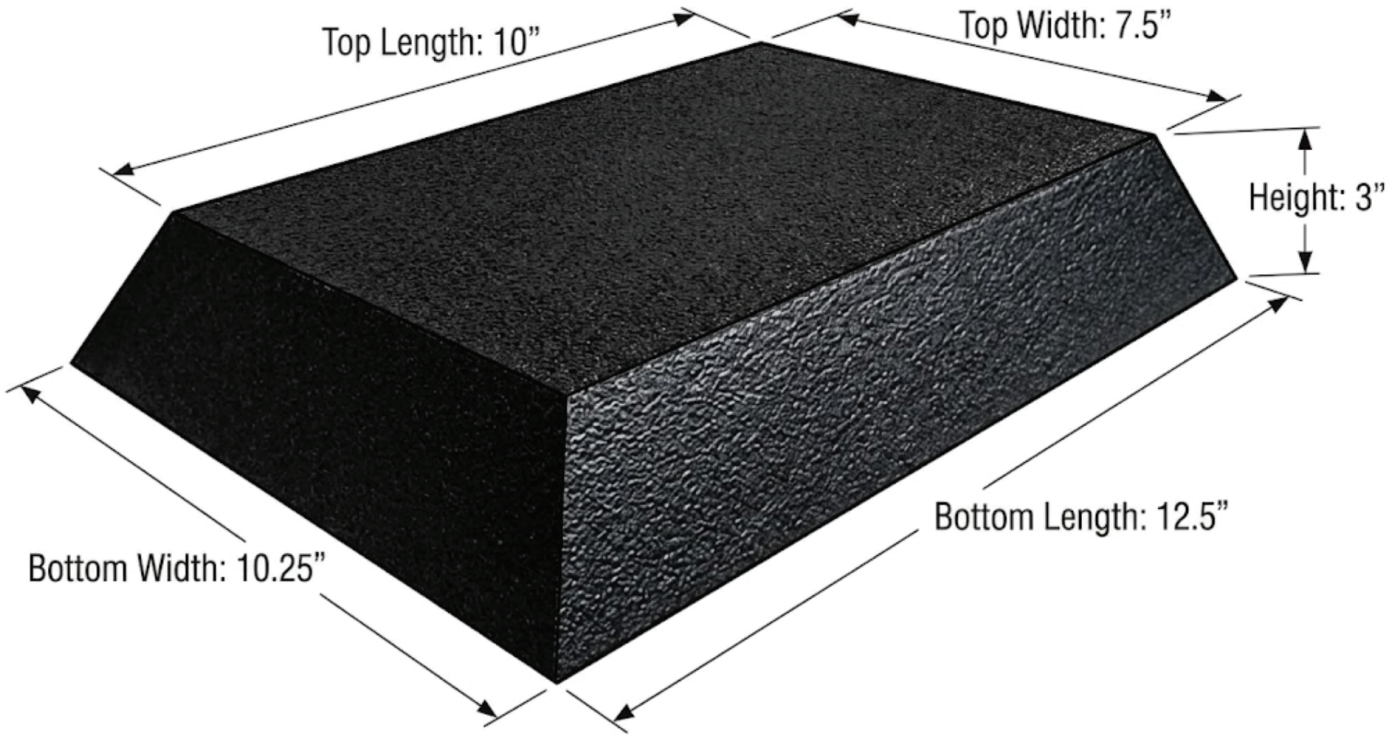

Date: 9/21/2026		**Drawing Title:** 3" Flared Edge Coated Rectangle Positioner
Scale: 1:1	**Unit:** Inches	**Drawing No:** PPFP-PCBL
		Notes: All dimensions are ±0.1"

PRODUCT INFORMATION
LARGE 3” FLARED EDGE COATED RECTANGLE POSITIONER
PPFP-PCBN

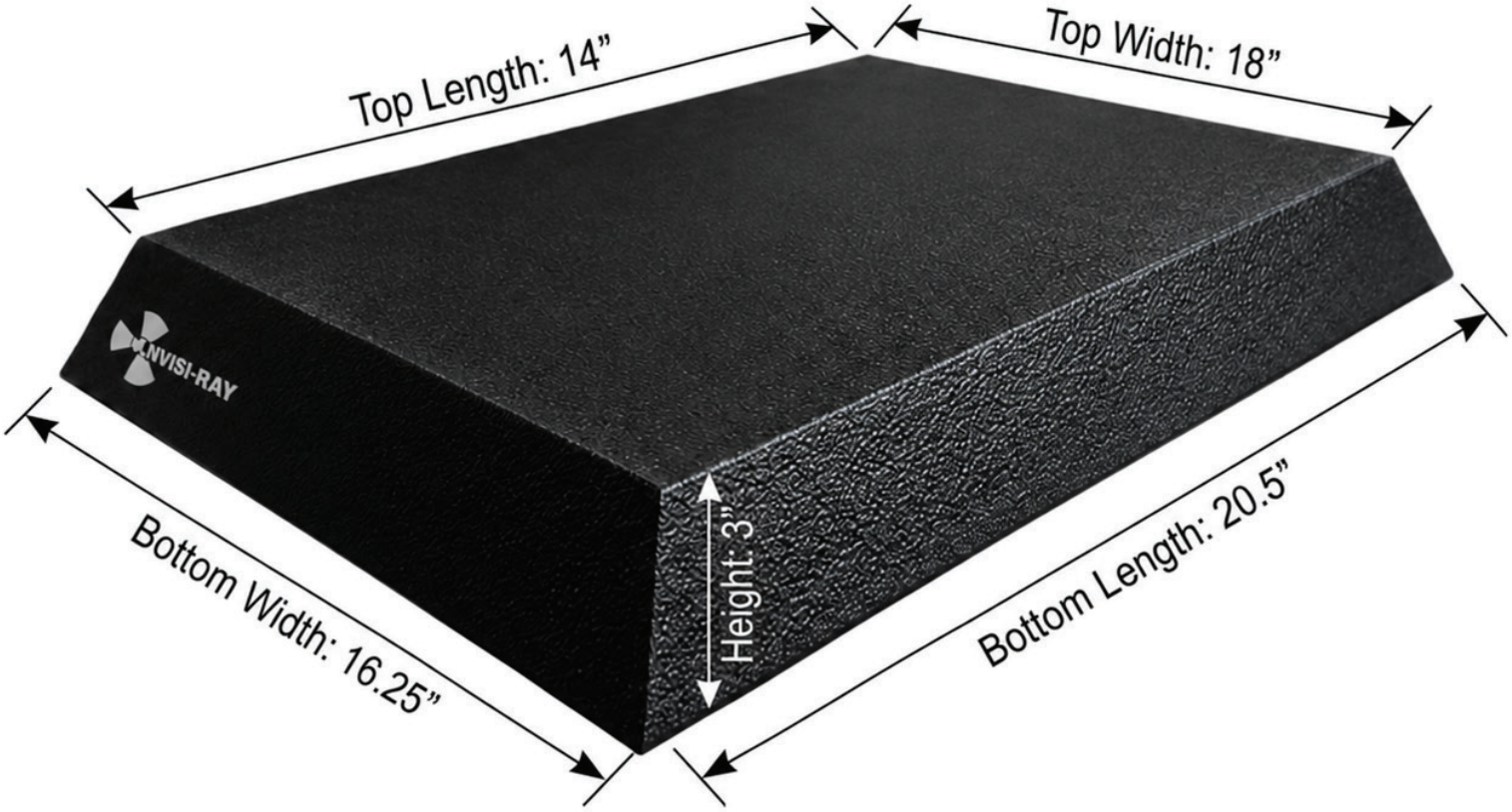

Date: 9/21/2026		**Drawing Title:** 3" Flared Edge Coated Rectangle Positioner
Scale: 1:1	**Unit:** Inches	**Drawing No:** PPFP-PCBN
		Notes: All dimensions are ±0.1"

CONTACT

Should you need any further information,
please do not hesitate to contact us.

123 Lincoln Blvd, Middlesex, NJ 08846, USA

+1 866 575 1307

service@phillips-safety.com

www.phillips-safety.com